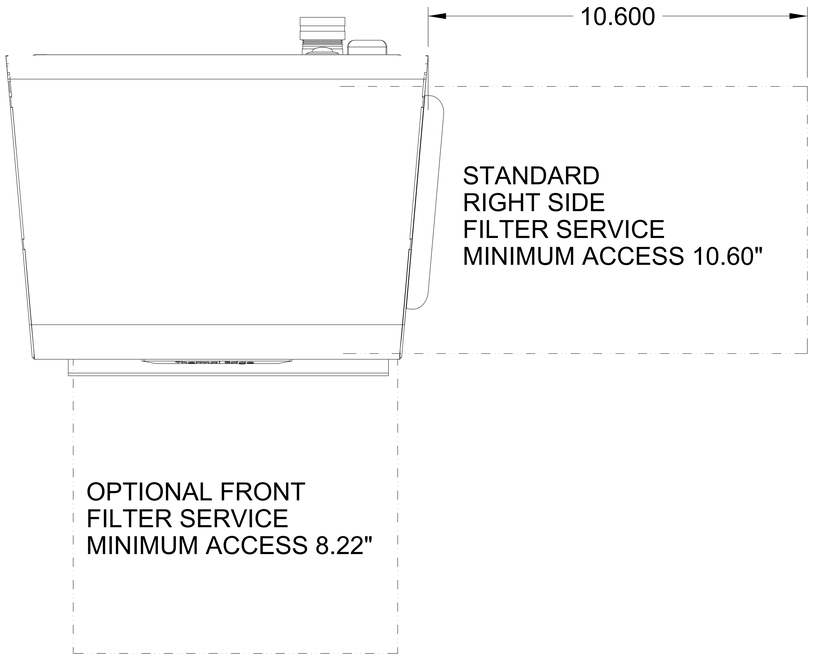

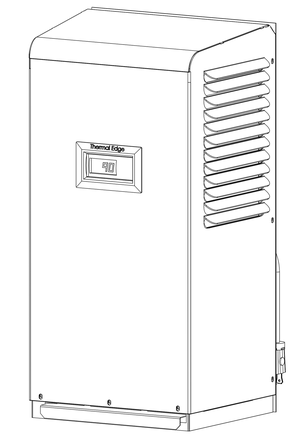

1/2 SCALE

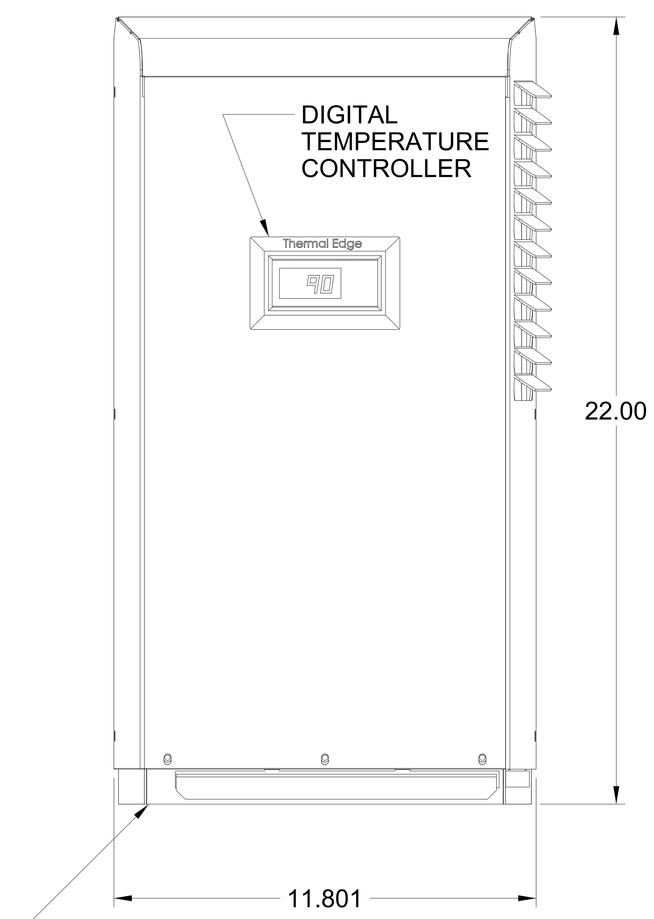

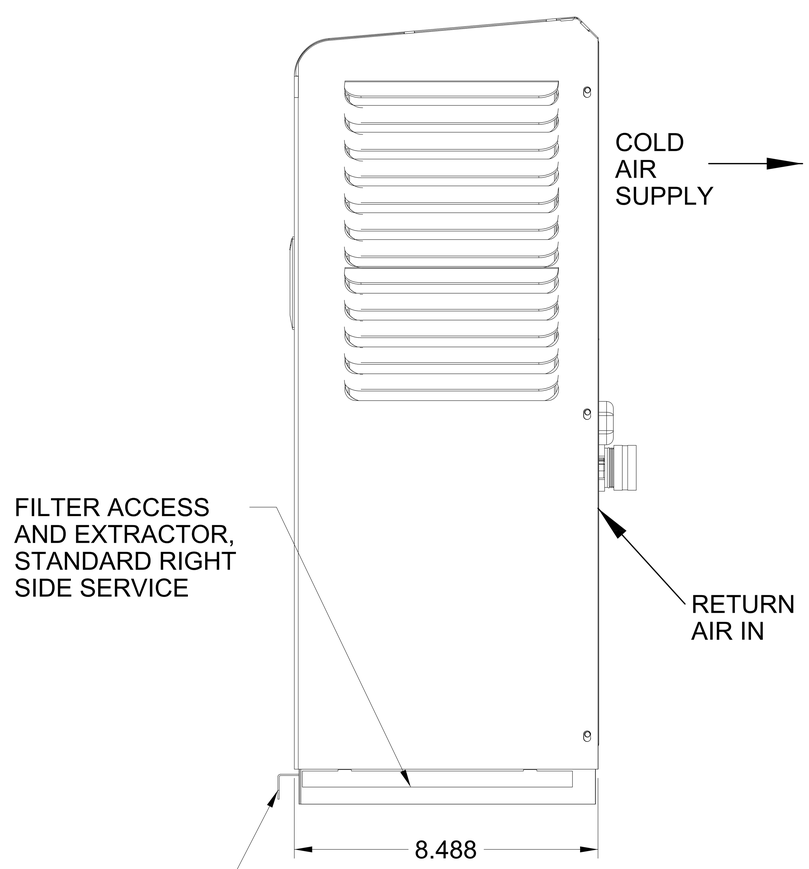

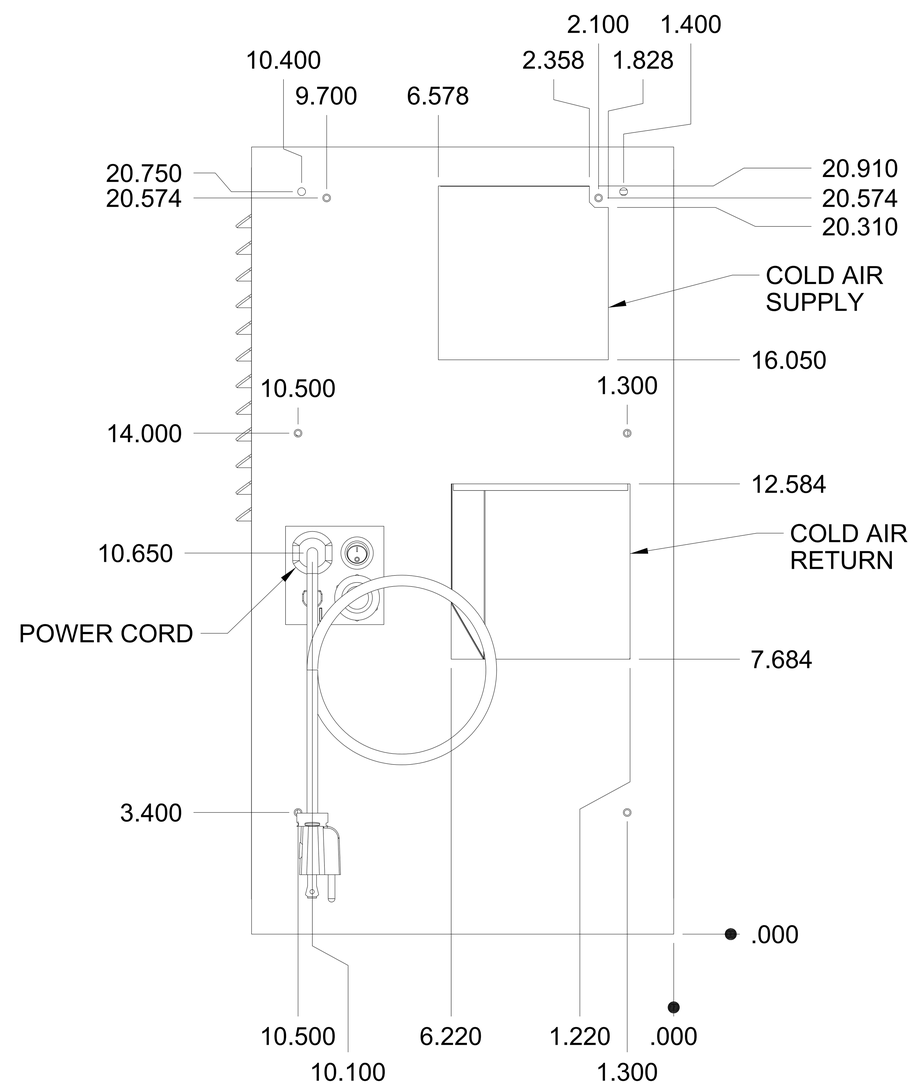

AMBIENT AIR
(ENTERS FROM BELOW)
WASHABLE FILTER

FILTER ACCESS
AND EXTRACTOR,
FRONT SIDE SERVICE
(AVAILABLE ON REQUEST)

	NAME	DATE	
DRAWN	dakins	03/20/08	
CHECKED			TITLE NARROW EDGE NE010
ENG APPR			
MGR APPR			

UNLESS OTHERWISE SPECIFIED
DIMENSIONS ARE IN INCHES
ANGLES ±1° or 1 PL ±0.5°
2 PL ±0.02 3 PL ±0.010

SIZE E | DWG NO NE010 | REV

FILE NAME: isc_ne_010_drwg.dft

SCALE: | WEIGHT: | SHEET 1 OF 1