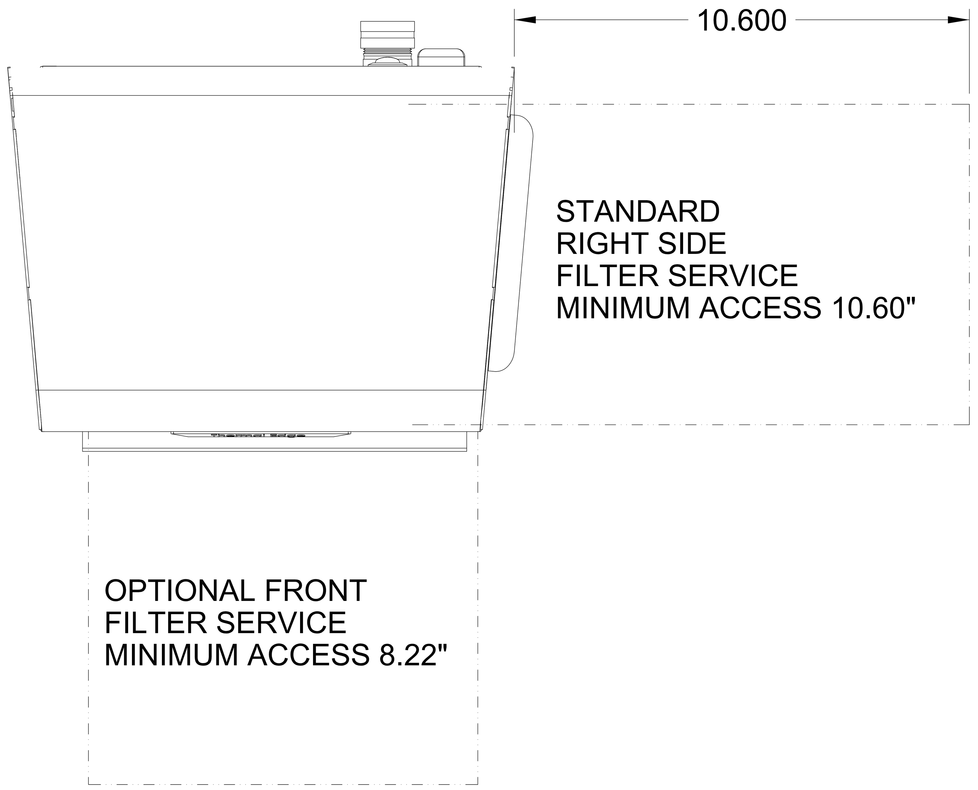

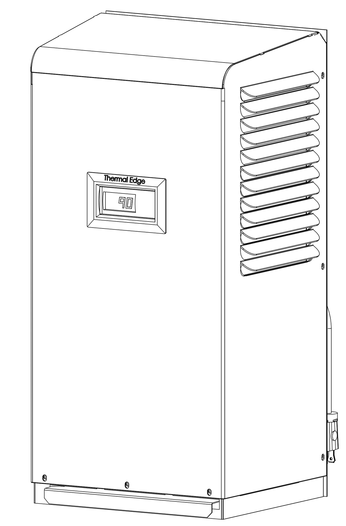

1/2 SCALE

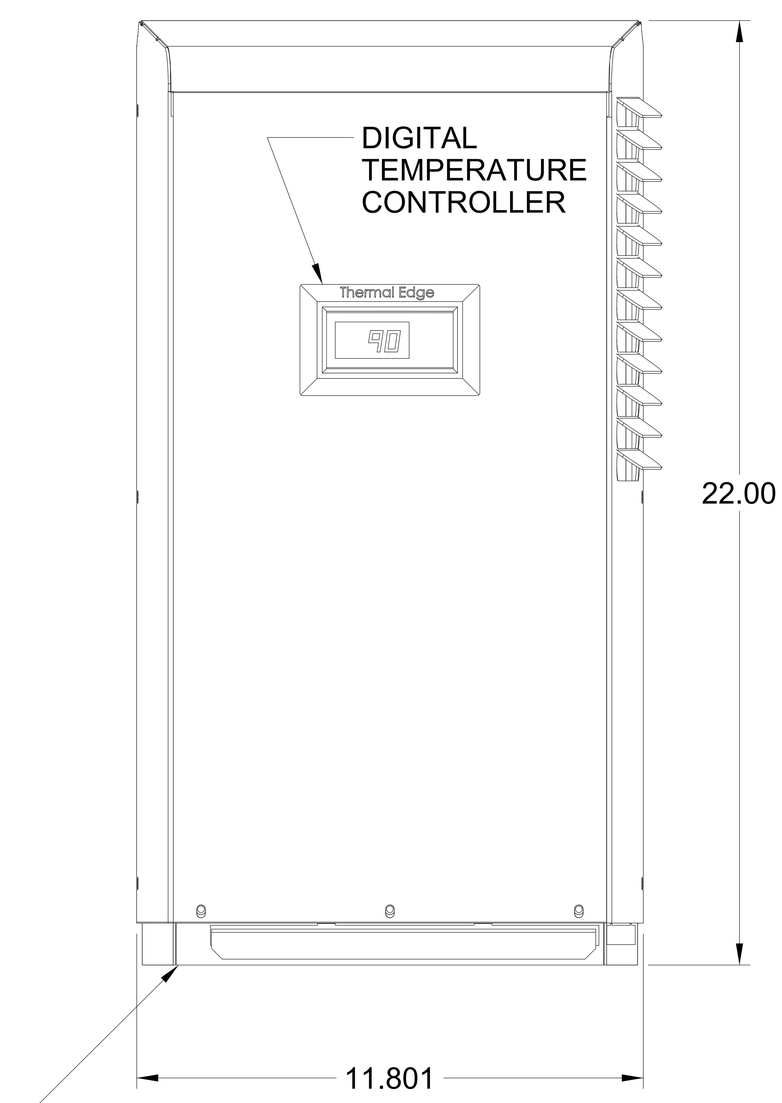

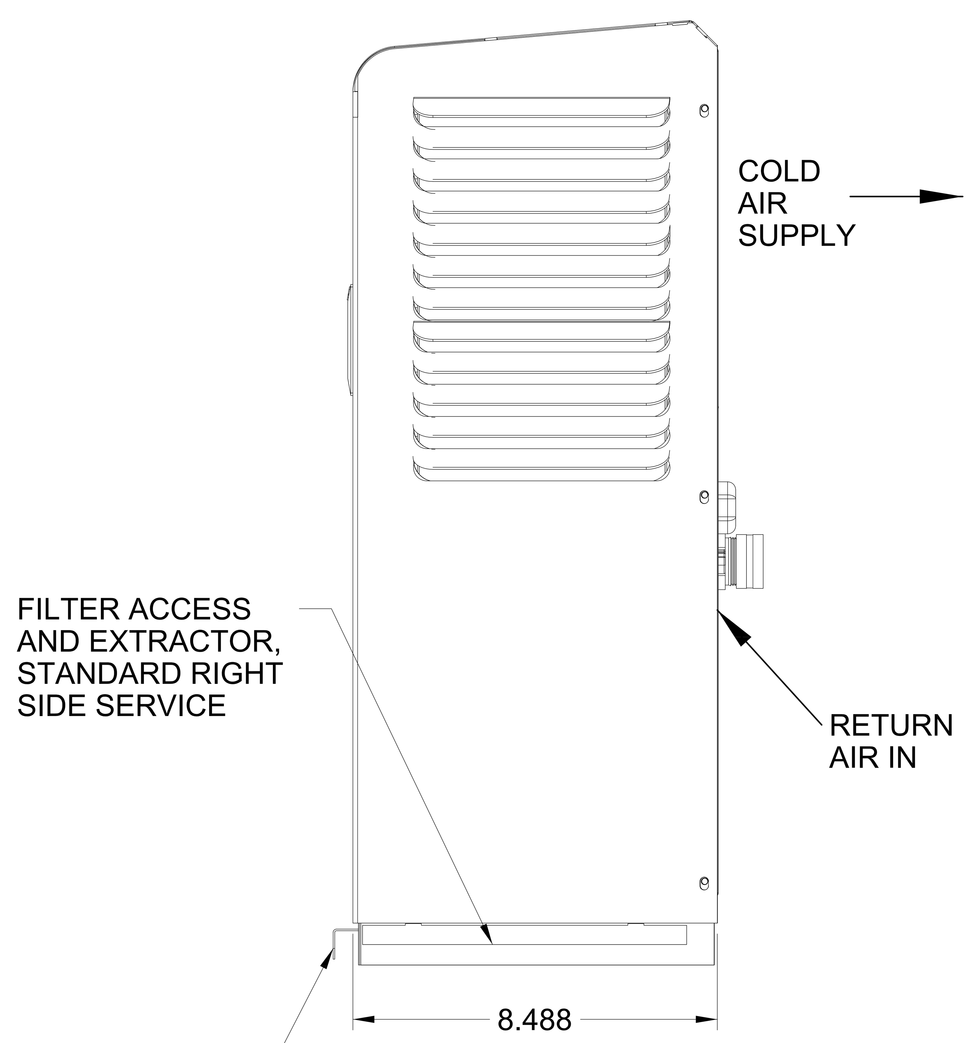

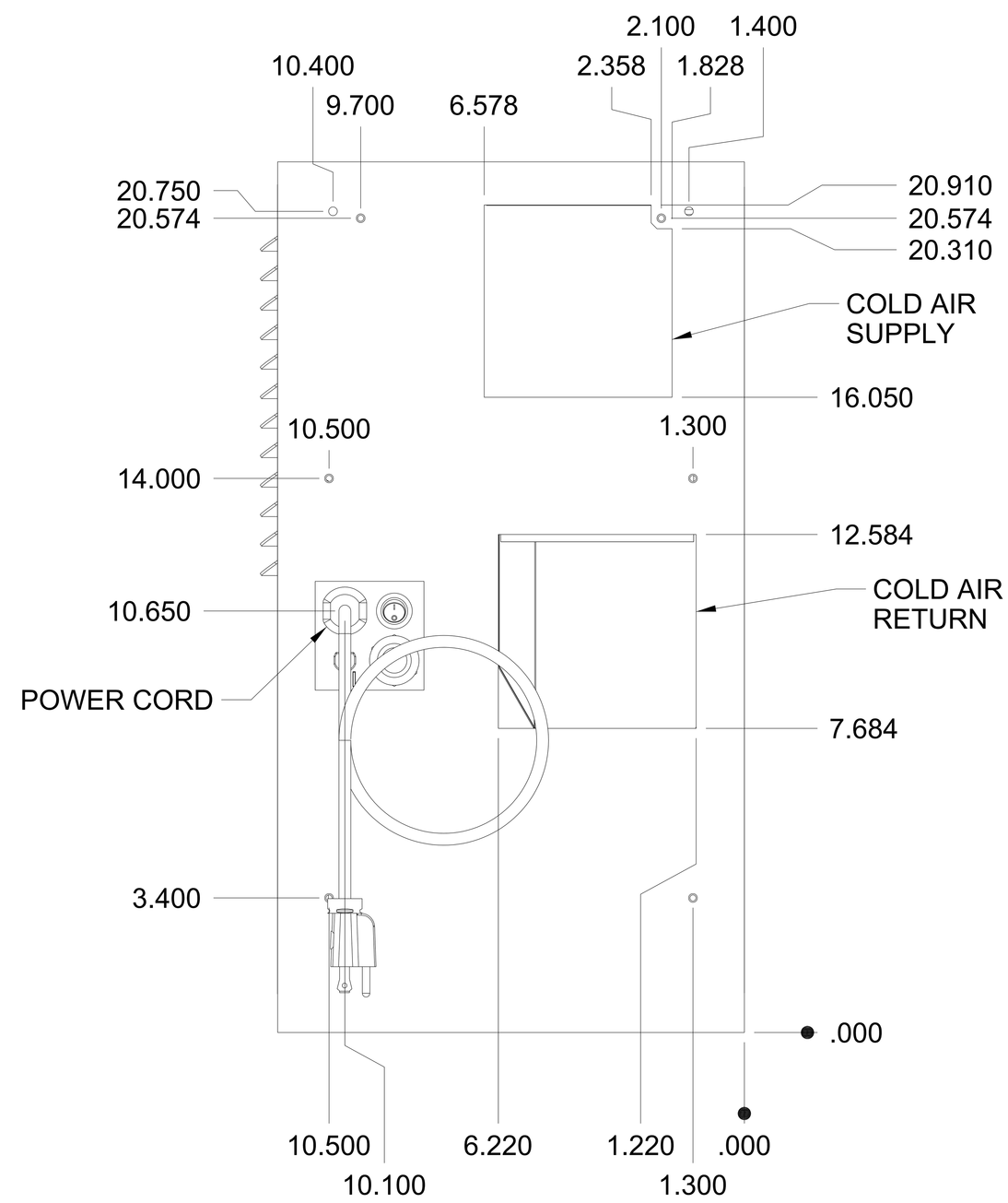

AMBIENT AIR
(ENTERS FROM BELOW)
WASHABLE FILTER

FILTER ACCESS
AND EXTRACTOR,
FRONT SIDE SERVICE
(AVAILABLE ON REQUEST)

	NAME	DATE
DRAWN	dakins	03/20/08
CHECKED		
ENG APPR		
MGR APPR		

UNLESS OTHERWISE SPECIFIED
DIMENSIONS ARE IN INCHES
ANGLES ±1° or 1 PL ±0.5°
2 PL ±0.02 3 PL ±0.010

TITLE NARROW EDGE NE015

SIZE E | DWG NO NE015 | REV

FILE NAME: isc_ne_015_drwg.dft

SCALE: | WEIGHT: | SHEET 1 OF 1