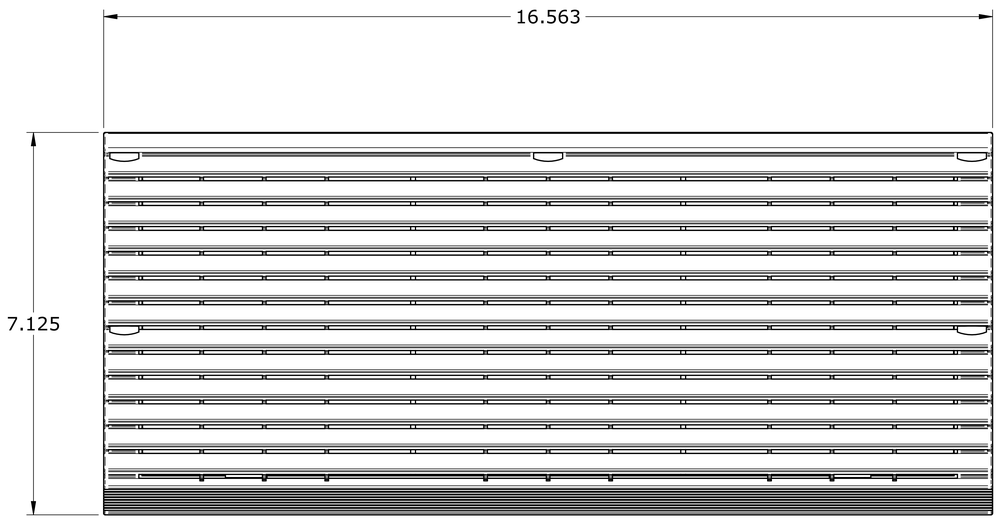

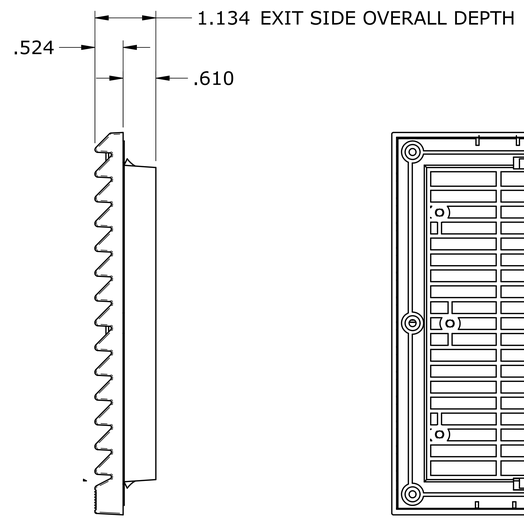

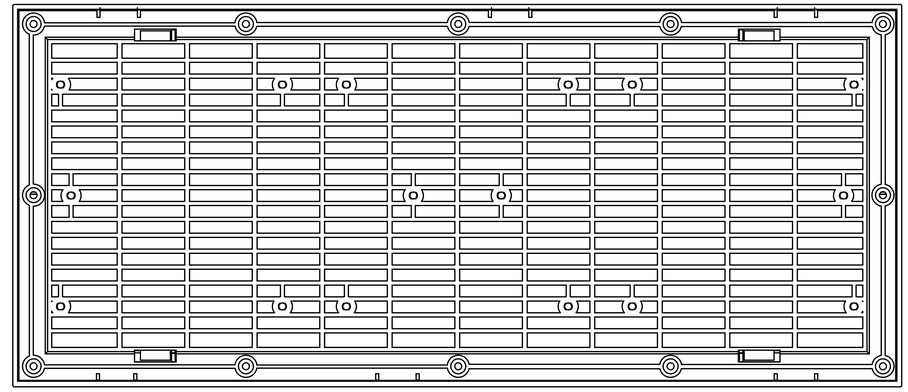

PLASTIC FILTER FAN
EXIT SIDE

DWG NO

PFFP390 EXIT