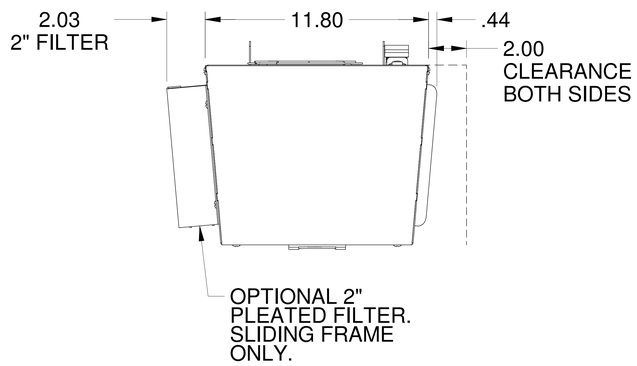

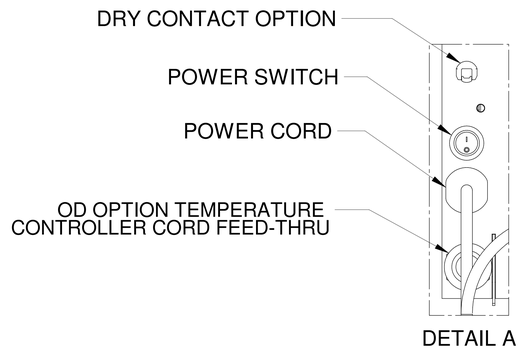

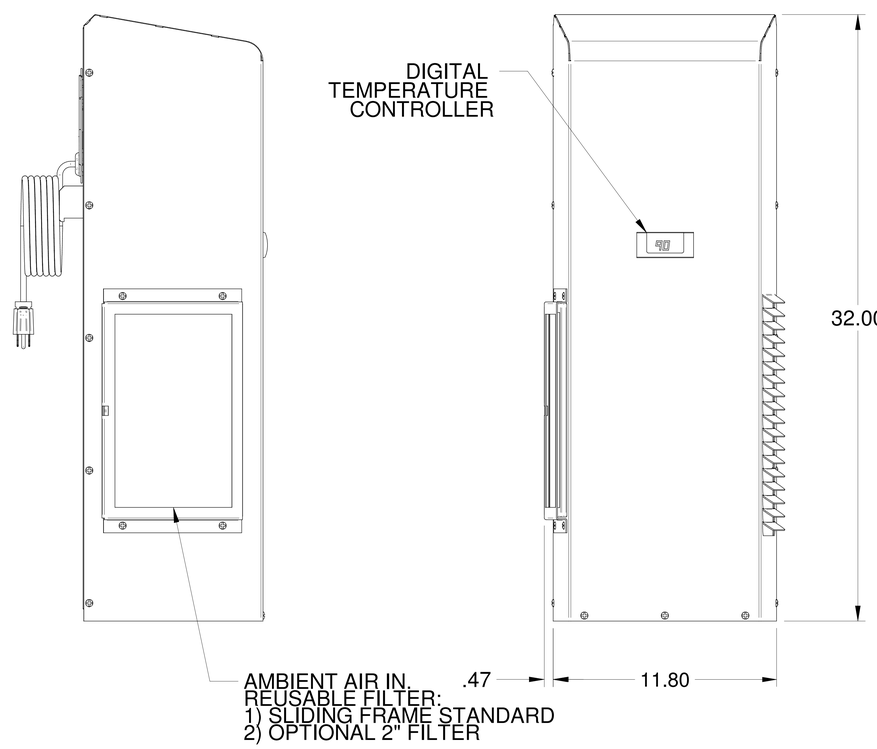

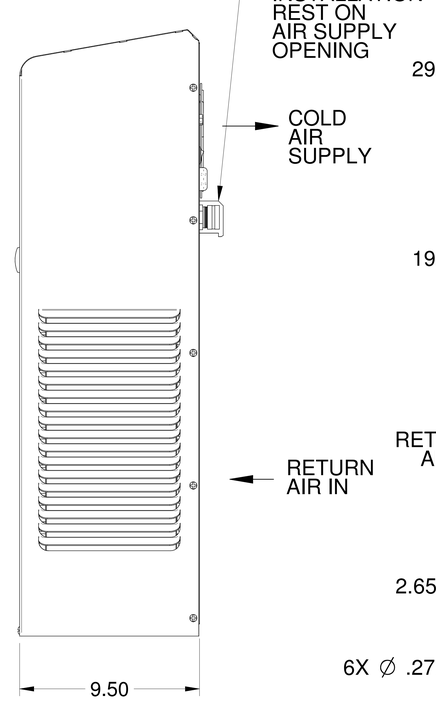

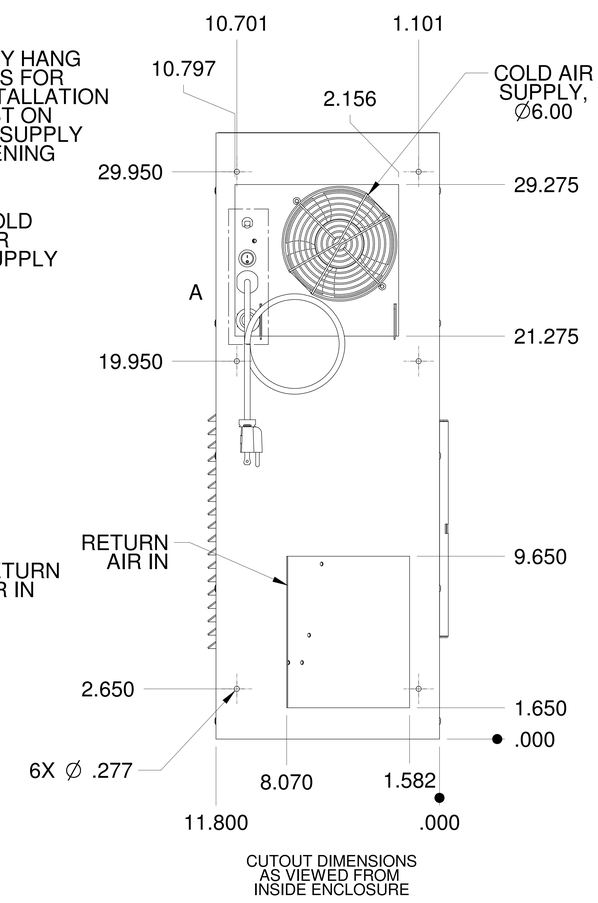

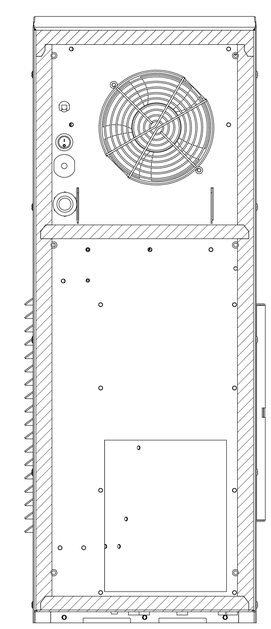

TITLE	NARROW EDGE NE040 115V AND 230V	
SIZE 136" X 88"	DWG NO **NE040**	REV
SCALE: FULL	WEIGHT:	